# A Curriculum of Table-Top Quantum Optics Experiments to Teach Quantum Physics

**Enrique J. Galvez**
Department of Physics and Astronomy, Colgate University, Hamilton, New York 13346, USA
E-mail: egalvez@colgate.edu

**Abstract.** The rise of quantum information as a viable technology requires appropriate instructional curricula for preparing a future workforce. Key concepts that are the basis of quantum information involve fundamentals of quantum mechanics, such as superposition, entanglement and measurement. To complement modern initiatives to teach quantum physics to the emerging workforce, lab experiences are needed. We have developed a curriculum of quantum optics experiments to teach quantum mechanics fundamentals and quantum algebra. These laboratories provide hands-on experimentation of optical components on a table-top. We have also created curricular materials, manuals, tutorials, parts and price lists for instructors. Automation of the apparatus offers the flexibility of using the apparatus remotely and for giving access to a greater number of students with a single setup.

## 1. Introduction

Quantum information is an emerging field with many technological applications. It has grown to be of interest beyond physics research and into engineering and associated technological fields. Curricular revisions must go in hand with these technological advances. The key concepts of quantum mechanics must be introduced into engineering instruction and basic technical training. To help students connect theory with practice, instructional laboratories are needed. In addition to the theoretical treatment of quantum mechanics, which relies on advanced mathematical tools such as linear algebra and differential equations, the conceptual challenges of quantum mechanics are significant. Superposition, entanglement and indeterminism are a few of the concepts that are counter intuitive, which have no classical analog. It is important to understand these concepts to gain a deep understanding of the theory that underlies the new technologies. Hands-on laboratories offer students the opportunity to go beyond the algebra of quantum mechanics and connect concepts with actual measurements. They offer an opportunity to grapple with the predictions of quantum mechanics, and to reach a deeper level of understanding of the fundamentals of the theory.

Over the past 20 years we have developed a curriculum of laboratories to offer a laboratory component to quantum mechanics. A number of researchers and educators have also developed their own experiments and methods [1]. In this article we present the work that we have done and the experiments that we currently offer as part of our instruction of physics students. Details of these laboratories have been published and posted on our website [2], so the purpose of this article is to give an overview of the instructional opportunities that are at hand. In the sections below we present an overview of ten quantum optics experiments that can be set up for laboratory instruction.

## 2. A Curriculum of Quantum Mechanics Laboratories

Current platforms for implementing quantum information technologies expand a vast number of systems, from superconducting circuits, to systems of atoms, ions, molecules and photons. Of all of these, photonic systems require a simpler laboratory infrastructure. To set up quantum experiments we need to start with a quantum system in its simplest form: a qubit. Single quantum of atomic, molecular, ionic or spin systems pose huge challenges for instructional purposes due to the sophisticated equipment that is needed, such as vacuum systems, multiple laser beams, plus other hardware to set up precise electromagnetic fields. Even a concise semiconductor circuit must use low temperatures to reach the superconducting regime where quantum effects are significant. Light on the other hand, photons, offer significantly reduced complications. Ideal single photon sources are not straight-forward either, and an attenuated light beam is not a source of single photons. The exception is the nonlinear process of spontaneous parametric down conversion. It reliably produces pairs of photons with relatively low input laser power (tens of mW). The pairs can be set up to be entangled in various degrees of freedom. Their biggest disadvantage is scalability, as it is very difficult to produce more than two photons. Yet with two photons we can do a number of table-top experiments that demonstrate various fundamental aspects of quantum mechanics. Below we list the laboratories that we have developed and use in the instruction of undergraduates at Colgate University.

### *2.1. Spontaneous Parametric Down-Conversion*

This is always a first experiment that entails setting up the main process of spontaneous parametric down conversion (SPDC). Although the process still involves quantum effects, the main objective is to set up the apparatus for further experiments. The basic equipment needed is seen in Fig. 1 (detailed lists are given in our website [2]). Most of the equipment is off-the-shelf commercial opto-mechanical components. The apparatus requires a 405-nm diode laser beam to be incident on a beta-barium-borate (BBO) crystal to produce photon pairs at 810 nm. Down-converted photons are collected by fiber collimators connected to multimode fibers. The latter channel the photons to single-photon avalanche diode detectors. The electric-pulse output of the detectors is processed by an electronic board that records coincident photon events. The output is conveniently displayed on a lab computer, via a USB connection.

The previous description skips some details. Because the down-converted photons are too weak to be seen, an auxiliary laser beam must be used to align the optics that channels the photons into the optical fibers. We have detailed instructions and videos posted on our website [2]. To help in the alignment of optical beams, we use an iris mounted on a magnetic mount and a home-made plumb bob to correlate beam path with auxiliary markings on the breadboard.

SPDC produces photon pairs. Energy conservation requires

$$E_0 = E_1 + E_2, \tag{1}$$

where $E_0$ is the energy of the pump photon, and $E_1$ and $E_2$ are the energies of the down-converted photons. Similarly, momentum conservation *inside* the crystal requires

$$\vec{p}_0 = \vec{p}_1 + \vec{p}_2, \tag{2}$$

where $\vec{p}_0$ is the momentum vector of the pump photon and $\vec{p}_1$ and $\vec{p}_2$ are the momenta of the down-converted photons. If $E_1 = E_2$ then the down-converted photons come out of the crystal forming a cone centered about the pump-beam direction and with a cone angle $\theta$. The down-conversion process is via type-I, which results in photon pairs with the same polarization that is orthogonal to that of the pump photon. Adjustment of the tilt of the crystal controls $\theta$. We find that $\theta = 3°$ is a convenient angle to use. At 1 m from the crystal, the collimators are separated by about 10.4 cm, which is enough space for the collimator hardware.

In the alignment stage, the alignment beams mimicking down-converted photons must get through the center of the crystal and into the fibers. Once the apparatus is nominally aligned, the experimental tasks are to obtain down-conversion events: singles counts from the individual detectors (greater than 10 kHz) and coincidence counts greater than the accidental level. The latter can be calculated via the relation

$$N_{\mathrm{acc}} = N_1 N_2 \Delta t / t_{\mathrm{int}} \tag{3}$$

where $N_1$ and $N_2$ are the singles counts, $\Delta t$ is the coincidence window (time within which the arrival of two pulses from detectors 1 and 2 is considered to be due to paired photons), and $t_{\mathrm{int}}$ is the time of integration of the photon counts. Tilting the BBO crystal will suddenly produce a dramatic increase in counts when the phase matching condition is reached (i.e., when Eq. 6 is satisfied for the relative locations of the crystal and collimators). The tilt of the crystal is very sensitive: a crystal tilt of 3 arc minutes changes $\theta$ such that it shifts the down-converted beam off the collection solid angle of the collimators. One of the collimator mounts can be moved along the curved track to tune the detection of pairs.

Photon pairs produced this way can be used in two schemes. In a first one, called heralded photon experiments, where one photon goes directly to a detector, and heralds the presence of the other photon going through the apparatus. Is is used to highlight the quantum mechanics of single quanta. In the second scheme, both photons are actively involved in the quantum mechanics of the measurements. They can be used to observe two photon effects, including entanglement.

### *2.2. Polarization Stern-Gerlach Experiments*

Since the down-converted photons are polarized, we can use polarization optics (half-wave plates, polarizers, beam displacers) to mimic the actions of a Stern-Gerlach apparatus on spins [3]. Thus, students can explore basis rotation, state projection and measurement. Figure 1(a) shows a typical setup that uses a polarizing beam splitter to detect two polarization components of a heralded photon. This setup requires a third arrangement for photon collection and detection. That way one can detect two orthogonal basis states of polarization.

The setup of Fig. 1 can also be used to perform single qubit operations. The half-wave can be used to implement quantum gates for polarization qubits: fast axis at 0 degrees to the horizontal is a Z phase-flip gate; fast axis at 22.5° is the Hadamard gate; and fast axis at 45° is the X state-flip gate. An important aspect of this experiment is to make students correlate the quantum algebra with an actual physical system.

### *2.3. Single-Photon Interference*

One of the most vivid demonstrations of quantum superposition is where a single photon interferes with itself due to traveling both arms of an interferometer. It brings to the forefront one of the biggest dilemmas of quantum physics: particle *versus* wave. We choose a Mach Zehnder interferometer with photon collection and detection at the two outputs of the interferometer, as shown schematically in Fig. 2(a). In such an apparatus the photon travels through the interferometer, interferes like a wave but is detected whole like a particle. This is seen by the (complementary) interference fringes that are obtained at the two outputs of the interferometer as the interferometer phase is scanned [4].

The interferometer needs a few additional parts beyond the basic setup. The alignment of the interferometer is one of the most challenging in these types of experiments. This is because the bandwidth of the down-converted photons is determined by the filters in front of the photon collectors. A good compromise for collecting enough photons and getting a long enough coherence length is to use filters with a bandwidth around $\Delta\lambda = 40$ nm. To observe

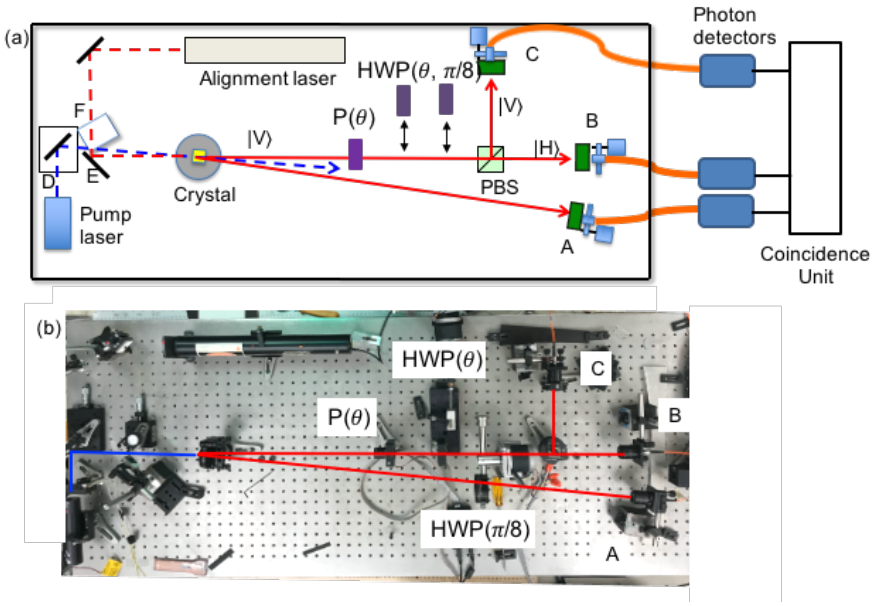


**Figure 1.** A typical quantum lab setup showing the pump laser being steered by mirror D. Edge mirror E and flip mirror F are used to steer the alignment laser to follow the path of the down-converted photons. The heralding photon is collected by hardware labeled A. The signal photon, initially in state $|V\rangle$, travels through optical elements and its state is measured by a polarization beam splitter (PBS), where its projection to state $|H\rangle$ is collected by hardware labeled B, or its projection to state $|V\rangle$ by C. Photons are channeled to detectors and signal processing. Curved surface allows A and B mounts to slide transversely without misalignment. (a) Schematic and (b) Photo of the apparatus.

fringes, the interferometer has to be aligned to a path-length difference of less than the coherence length. The coherence length is given by

$$\ell_c = \lambda^2/\Delta\lambda, \tag{4}$$

which for a down-converted wavelength of 810 nm with a 40-nm bandwidth gives $\ell_c = 16$ $\mu$m. Thus, the alignment of the interferometer is critical. For many reasons, a Mach-Zehnder interferometer is the appropriate interferometer to use. The best technique is to set up the input photon path to be parallel to the rows of holes of the breadboard [2]. This way, optical components of the interferometer can be added one by one while ensuring that they reflect the light into orthogonal paths. The alignment laser is most useful for this purpose. One of the mirrors is mounted on a translation stage with a piezo-electric placed as a spacer. A careful assembly of the interferometer gets the path difference to be a few tens of micrometers, but still likely much longer than the coherence length. The last step involves searching for white-light fringes: placing a broad-band source (a small incandescent bulb) at the entrance of the interferometer, and observing the spectrum of the light with a spectrometer at one of the output ports of the interferometer. Modern fiber spectrometers, widely available commercially, are especially convenient for this purpose. The fringes in the spectrum can be used to calculate the path-length difference $\Delta L = \lambda_1\lambda_2/(\lambda_2-\lambda_1)$, where $\lambda_1$ and $\lambda_2$ are the wavelengths of adjacent maxima in the spectrum. Adjustment of the path length of the interferometer to zero proceeds by observing the spreading of the fringes as the position of the stage is adjusted [4].

The interferometer aligned as described above shows interference. It can also be described as

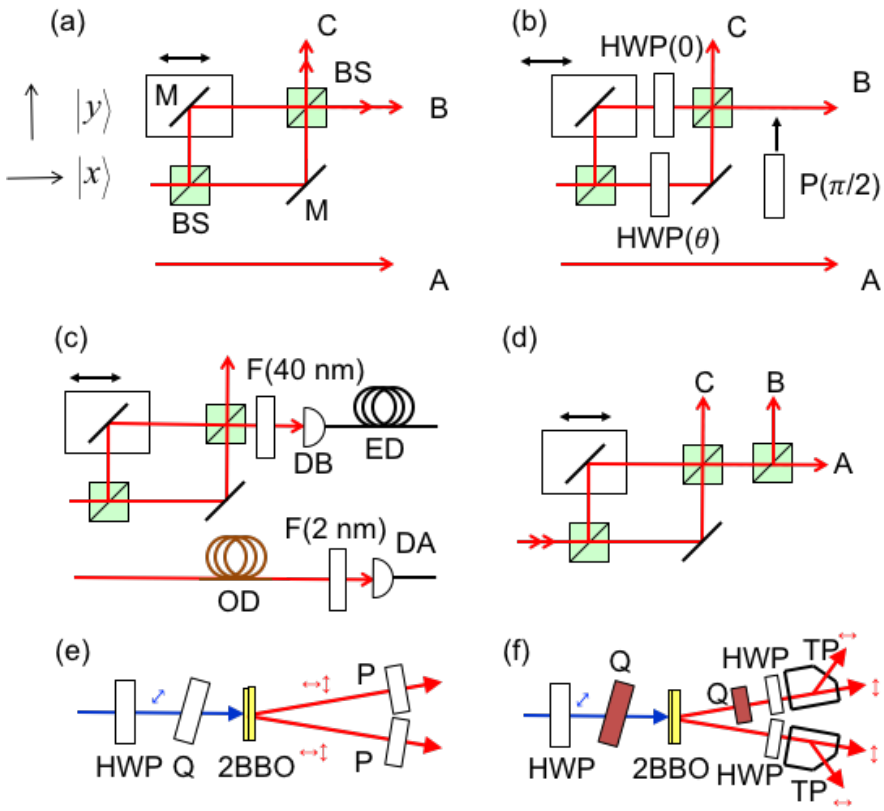


**Figure 2.** Schematic of educational experiments with correlated (entangled) photon pairs: (a) Single-photon interference, involving non-polarizing beam splitters (BS) and mirrors (M); (b) Quantum eraser, involving half-wave plates (HWP) and a polarizer (P); (c) Delayed choice, involving optical delay (OD), electronic delay (ED), bandpass-filters (F) and detectors (DA and DB); (d) Biphoton interference; (e) Polarization entanglement, involving quartz plate (Q), and 2-down-conversion crystals (2BBO); and (f) Quantum key distribution, involving Thompson prisms (TP).

a single qubit system, with the $x$ and $y$ momentum states as the basis. The optical elements of the interferometer are the beam splitters and mirrors. Their action is represented by quantum mechanical operators. Thus, in conjunction with a propagation phase, an operator for the entire interferometer can be constructed. The probabilities for exiting the interferometer in a given port are given by

$$P_B = (1/2)\,(1+\cos\delta) \tag{5}$$

$$P_C = (1/2)\,(1-\cos\delta)\,, \tag{6}$$

where $\delta = 2\pi\Delta L/\lambda$ is the phase difference due to a path length difference $\Delta L$. These probabilities are obtained by projecting the state of the light onto states $|x\rangle$ for $B$ and $|y\rangle$ for C. Interestingly, the interferometer operator constitutes a momentum-basis rotator [5]. This setup is a basic one that serves this and the next 3 experiments.

*2.4. The Photon Exists*

This experiment demonstrates that photons exist. Since Einstein's proposal of the energy quanta to explain the photoelectric effect, the latter has been taken as a demonstration of the existence of the photon as a whole quantity of energy. However, it has been argued that treating the light as a wave absorbed by quantum matter can explain the effect [6]. The simple experiment of the photon incident on a beam splitter is such a demonstration. The experiment also adds a subtle but important aspect of quantum nature: indeterminism. When a photon is incident on a beam splitter, all that we know are the probabilities that it will be transmitted or reflected. Quantum mechanics argues that there is no initial parameter that specifies what the photon will do at the beam splitter. This is also the motive of philosophical argumentation. Is it intrinsically random what the photon will do? All evidence so far suggests this to be true. While it is still being argued by realists, this phenomenon is already the basis of a technology to generate random numbers. Thus, the experiment, simple in its design, is deep in significance.

The experiment requires no further equipment than what we already have presented. In its simplest form, it involves a photon incident on a beam splitter to show that the photon is whole, being detected at either output but not at both. A classical wave would split at the beam splitter. In detecting the photon counts at the two outputs of the beam splitter, the experimenter focuses on the statistics of the measurements, which ends with the calculation of $g_2(0)$, the degree of second order coherence, or as it is simply called, the anticorrelation parameter [7]. This situation was first devised by Hanbury-Brown and Twiss in the study of light statistics [6]. This experiment with single photons has been done before [8], so we will not repeat it here in detail. Briefly, one of the photons is incident on a beam splitter. The electronics collects photon counts from A, B and C (see for example Fig. 1, but with either input polarization not along the horizontal or vertical axes, or with a non-polarizing beam splitter). The anticorrelation parameter is given by

$$g_2(0) = \frac{N_A N_{ABC}}{N_{AB} N_{AC}}, \tag{7}$$

where $N_A$ are the singles counts of the heralding photons, $N_{AB}$ and $N_{AC}$ the doubles coincidences, and $N_{ABC}$ the triple coincidences. For single photons $g_2(0) = 0$, but for a classical wave $g_2(0) \geq 1$. An attenuated laser does not work because the light is in a coherent state, which is a superposition of states of one or more photons traveling together, resulting in $g_2(0) = 1$, mimicking the results of a classical wave.

While a simple beam splitter discussed above will suffice to do the experiment, it is more powerful to use the interferometer as a variable beam splitter. Overall the photon comes out of the interferometer through one of the ports, with probabilities depending on the relative phase $\delta$, per Eqs. 5 and 6. Thus, it is a variable beam splitter, embodying all the characteristics of the simple one. However, using the interferometer beam splitter adds a striking element to the outcome: photons interfere as waves but are detected whole. In performing this experiment, for example, our undergraduates calculated $g_2(0) = 0.020 \pm 0.006$ from their measurements, which is 130 standard deviations from the classical result.

*2.5. The Quantum Eraser*

The interference experiment with single photons is an example of quantum superposition. Quantum effects and information rely on superposition, a non-classical effect. It is important to understand when there is superposition. Feynman gave a very insightful argument as a criterion for interference: indistinguishability [9]. His argument goes as follows: if an event can occur in two or more indistinguishable ways, then the probability of the outcome is the square of the sum of the amplitudes for each case; if the possibilities are distinguishable, then the probability of the sum of the squares of the possibilities considered separately. Two ways of an event are indistinguishable when there is an inherent inability to tell one possibility from the other.

Superposition, and interference, are not present when the two possibilities are distinguishable, even if we do not measure the distinguishing information.

The quantum eraser experiment focuses on the argument of indistinguishability by manipulating the polarization of the light. A schematic of the apparatus is shown in Fig. 2(b). There are 3 minor additions to the previous interferometer [10]. Two half-wave plates are placed in each arm of the interferometer. Two are needed to provide compensating optical paths. When both have fast axes aligned with the horizontal, they do not disturb the polarization. With the two arms not having distinguishable features, interference is observed. When one of the half-wave plates is rotated by 45°, the polarization of the light is rotated by 90 degrees, making the paths distinguishable by polarization. Under this condition interference disappears.

Quantum mechanics concerns with what is measured. The point of the quantum eraser is to exploit this in a seemingly counter-intuitive way: by erasing the distinguishing information *after* the light has passed through the interferometer. This is done by placing a polarizer after the interferometer with transmission axis at 45° from the horizontal. Both polarization components project equally in going through the polarizer. Past the polarizer the photon takes on the direction of the polarizer and thus no longer carries path-distinguishing information. The polarizer erases the distinguishing information, and so interference reappears.

This experiment is a favorite of students working on it. It stresses the seemingly contradictory aspects that are borne from our classical deterministic intuition. It does not clarify the wave-particle duality, but it hits on the key dilemma of quantum physics, forcing students to grapple with it. Figure 3(a) shows the three sections of the quantum eraser. It is also a very dynamic experiment: the experimenter makes changes via manipulating optical components, and the dynamics of the signals change dramatically. At our institution we also offer it as a lab for our first semester course on quantum physics. The figure shows the 3 stages of the experiment: fringes for indistinguishable paths (left portion), no fringes when the paths are distinguishable (middle portion), and reappearance of fringes when the distinguishing information is erased (right portion; the maximum amplitude of the fringes is 1/2 of the left portion because of the projection due to the polarizer-eraser).

### *2.6. Delayed Choice*

This experiment deepens the striking predictions of quantum mechanics. As suggested by John Wheeler, a champion of quantum physics, quantum mechanics only predicts outcomes. Wheeler's argument is that quantum behavior can be uncovered in "post-selection." That is, after the photons are detected we can decide whether we see interference or not [11]. It serves to highlight this unusual aspect of quantum physics that not only is of fundamental importance, but that can be an integral part of a technological application.

The particular experiment that we present here is one that we developed recently [12]. It brings an interesting combination of concepts: photonic wavepackets and energy entanglement. It further makes the experimenter grapple with a seemingly innocent question: is the energy of the photon $E = h\nu$, exactly? What determines what the energy of the photon that is measured? Wheeler insisted that "a phenomenon is not a phenomenon until it is a measured phenomenon." With this experiment we fall squarely in this situation.

The setting is an interferometer, as we have seen before, but with a couple of changes, as seen in Fig. 2(c): the signal photon, which goes through the interferometer is detected immediately after leaving the interferometer; while the heralding photon travels through a long optical fiber so that it is detected well *after* the signal photon is detected. The photon collection on the signal photon has a bandpass filter with a 40-nm bandwidth. The heralding photon also has a filter that we can change, but it goes through it after the signal photon is detected. Since we have a coincidence unit, we use a long coaxial cable to channel the detector pulse to it. This way the pulses from the two photons arrive at the same time.

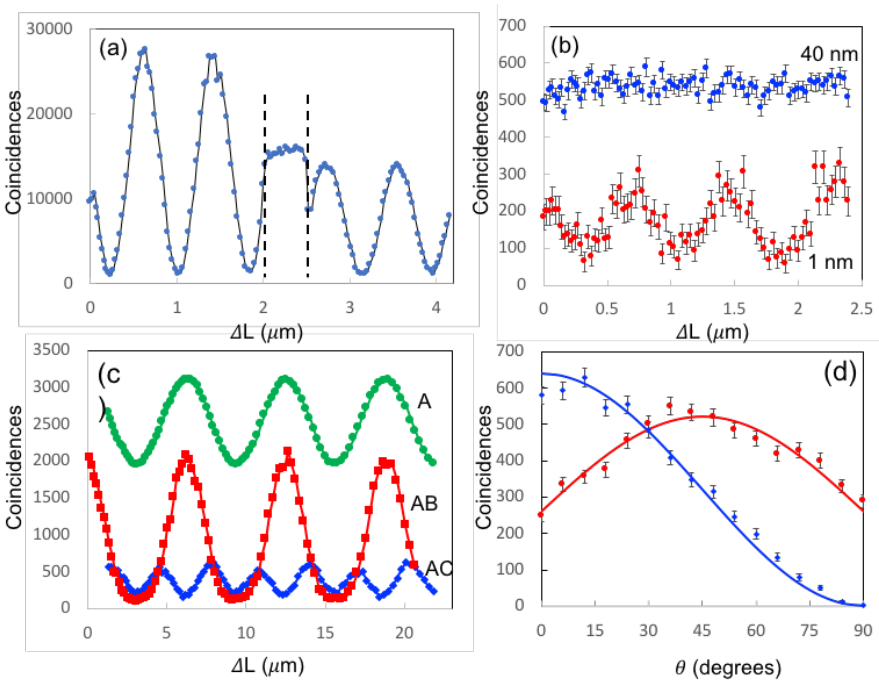


**Figure 3.** Data taken in several experiments: (a) Quantum eraser; (b) Delayed choice, showing data taken with two filters; (c) Biphoton interference, showing 3 data sets for single photons (A), both photons coming off the same output (AB) and photons leaving separate outputs of the interferometer (AC); (d) Entanglement correlations by rotating one polarizer with the other fixed at zero (blue diamonds) and $\pi/4$ (red circles) with solid curves being the expectation.

Before we consider the experimental measurements, we must consider the energy of a down-converted photon. Parametric down-conversion is a broad-band source: the energy of the photons is not specified, only their sum. The energy of the photon passing through the filter is indistinguishable within the bandwidth of the filter. Thus the photon does not have a well-defined energy. It is in a superposition of energy states: a wave packet of bandwidth $\Delta E$. This bandwidth in frequency translates into a time bandwidth $\Delta t$ by the Fourier relation of waves. The coherence length is $\ell_c = c\Delta t$. This line of reasoning leads to Eq. 4 above. We can then "imagine" photons as wavepackets of length $\ell_c$. The path length difference must verify $\Delta L < \ell_c$ for there to be coherent overlap between the amplitudes of a single photon. Conversely, we could think that when $\Delta L > \ell_c$, the photons do not interfere with themselves because the amplitudes from each arm do not overlap temporally when they get recombined. We could also think that the arms are distinguishable because a timing measurement of photon arrival times would find the photon taking the shorter path arriving distinguishably earlier than taking the longer path.

The experiment then proceeds as follows. With both filters at 40 nm we see interference when $\Delta L \ll \ell_c = 16$ $\mu$m. As $\Delta L$ is increased to $\Delta L = 80$ $\mu$m the interference disappears. We can then change the filter to a shorter bandwidth of 1 nm. As such $\ell_c = 640$ $\mu$m $\gg \Delta L$ and so interference reappears (another eraser!). There are two twists here. The first one is that the filter that we change is the one on the heralding photon. Since the photons are entangled in energy we can argue that coincidence detection of the two photons enforces $\Delta E_1 = -\Delta E_2$. The second twist is that the heralding photon goes through the narrow bandwidth at a time when the signal photon no longer exists. The coincidence detection performs a post selection. That delayed filter selection is also known as "delayed choice." The photons are entangled, but that

does not mean that a measurement on one "instantly" changes the state of the other, as it is commonly believed. In this experiment we measure the state of both photons, and so the full outcome does not arise until both photons are measured (i.e., Wheeler's dictum).

Figure 3(b) shows a sample of data taken by students. For the two graphs $\Delta L = 85\ \mu$m. No interference is seen when the filter on the heralding photon has a 40-nm bandwidth, but when the filter has a 1-nm bandwidth, interference fringes are seen. Students took a more comprehensive set of data where they showed visibility curves as a function of $\Delta L$ for the two filters.

*2.7. Biphoton Interference*

This experiment shows non-classical interference fringes. The BBO crystal is tilted for collinear down-conversion. Both photons go through the interferometer and they are detected either at separate ports of the interferometer or at the same port, as shown in Fig. 2(d). Figure 3(c) shows 3 sets of data. Single photon interference is a perfect sine curve following Eq. 5, responding to two possible paths of one photon (A). When we detect the two photons coming out of the same port of the interferometer (AB) the fringes follow the probability [4]

$$P_{AB} = (1/4)\,(1 + \cos\delta)^2\,. \tag{8}$$

This distinctive shape (with sharp maxima and broad minima) arises because it involves 4 probability amplitudes: 2 for both photons taking the same path, and 2 for the photons taking different paths. The third curve (AC) shows a striking pattern with twice the single-photon frequency, with probability

$$P_{AC} = (1/4)\,(1 + \cos 2\delta)\,. \tag{9}$$

This interference is due to 8 possible paths when the photon pairs leave the interferometer out of different ports. In both cases the photons behave as one, and hence the name *biphoton*. Note also that Eq. 9 implies a two-fold improvement over the classical resolution.

*2.8. Entanglement and Bell Inequalities*

Parametric down-conversion offers two ways of producing polarization entangled photons. The simplest kind to implement uses two thin BBO crystals rotated 90° relative to each other. The incoming pump beam has equal amounts of the polarization components each producing orthogonal pairs. When the crystals are thin and the two polarization components leave the crystal at the same angle, then it is not possible to distinguish in which crystal the photons are born, and as such they are in a state of superposition:

$$|\psi\rangle = (1/\sqrt{2})(|H\rangle_1|H\rangle_2 + |V\rangle_1|V\rangle_2). \tag{10}$$

The state of Eq. 10 is non-separable, and shows polarization entanglement. The probability of measuring both photons with horizontal polarization is 1/2, and likewise, the probability of measuring both with vertical polarization is 1/2. It is not a statistical mixture, where half the time the pairs are horizontal and the other half vertical. This difference can be verified by measuring the probability of detecting one photon in the diagonal state (at 45° to the horizontal) and the other photon in the anti-diagonal state (i.e., at −45° to horizontal), which is zero; while the probability for a statistical mixture is 1/4. More generally, if one of the polarizers is rotated by an angle $\theta$, the probability is [4]

$$P_{\text{ent}} = (1/4)(1 + \sin 2\theta), \tag{11}$$

whereas if the light is in a mixed state it is constant:

$$P_{\text{mix}} = 1/4. \tag{12}$$

Figure 2(d) shows data taken by students for this situation.

When measurements on the two photons are made, the correlations that are observed appear instantly, showing non-locality. The polarization of the two photons in state $\psi$ is undefined, challenging realism. Thus, the present experiment can also be used to show that light in the state of Eq. 10 can violate Bell inequalities [13]. It requires the BBO crystal pair, two polarizers, a half-wave plate to orient the pump beam appropriately, and a quartz plate to compensate for the asymmetry of the crystal pair. It is simple to implement and much easier to align than the interferometer experiments. The Clauser Horne-Shimony-Holt Bell inequality predicts that a parameter $S \leq 2$ for photons in a realistic local state. One can calculate that the entangled photon of Eq. 10 violates the inequality, and for certain values of the polarizer settings a maximum violation of $S = 2\sqrt{2} = 2.82$ is obtained. Some of the best results that our students have measured in the lab are: $S = 2.75 \pm 0.03$ a violation by 25 standard deviations. We can also prepare mixed states by dephasing the horizontal and vertical component with a quartz plate. This yielded $S = 1.47 \pm 0.04$ (the predicted value is $S = \sqrt{2} = 1.41$).

*2.9. Quantum Key Distribution*

This experiment has two objectives. One is to demonstrate the process of measurement in quantum mechanics. The second one is to show how it can be used in a technological application. We have mentioned throughout this article that an important component of quantum systems is superposition. A photon in a polarization state can be in a superposition of horizontal and vertical polarization with the setup of Fig. 1. After the polarization beam splitter (PBS) the measurement probability is given by the square of the amplitude of being in each polarization component. After the PBS the photon is no longer in a state of superposition. It is in one of the two states. In the language of quantum mechanics, the state of the system is projected onto one of the eigenstates of the measuring device (i.e., the PBS). That change is irrevocable, and the final state (say $|H\rangle$ or $|V\rangle$) has no memory of the state of superposition.

In our demonstration we use the Bennett-Brassard-84 (BB84) protocol, where the sender randomly picks one of two polarization bases: horizontal-vertical (H-V) or diagonal-antidiagonal (D-A). In the H-V basis states $|D\rangle$ and $|A\rangle$ are superpositions. Similarly, in the D-A basis $|H\rangle$ and $|V\rangle$ are superpositions. So if the sender-receiver use one basis and the eavesdropper (Eve) uses the other, then Eve may get incorrect data and will introduce errors in the communication between the sender (Alice) and receiver (Bob).

We use a scheme where Alice generates photons in state $\psi$ of Eq. 10 and makes a measurement after choosing one of the bases. Bob measures the state of the photon also by deciding on a measurement basis (H-V or D-A). Because $\psi$ is also

$$\psi = (1/\sqrt{2})(|D\rangle_1|D\rangle_2 + |A\rangle_1|A\rangle_2), \tag{13}$$

when Alice and Bob use the same basis they get the same state (e.g., both get $H$ or both get $V$ if they choose the H-V basis; or conversely, both get $D$ or $A$ if they use the D-A basis). They can share the choice of basis and discard the cases where they used different bases. The eavesdropper must guess the basis. When the guess is not correct the interception produces errors in Alice and Bob's measurements.

We mimic Eve using a thick quartz plate that makes the polarization components along its axes incoherent, and rendering the photon in a mixed state. This way, if Eve and Bob measure with distinct bases, then errors will appear in Bob's and Alice's results. In an actual implementation Alice and Bob would share part of their measurements to look for errors, and if the errors surpass a set percentage, then the communication can be deemed compromised and discarded. Thus, quantum mechanics is used to ensure the secrecy of the encryption key.

Although we reported this experiment recently [14], we have not yet implemented it into a laboratory experience. As shown in Fig. 2(f), it requires the same apparatus to make polarization

entangled photons, but uses an additional quartz plate, but also two polarization splitters (Thompson prisms) and 4 detectors.

*2.10. The Hong-Ou-Mandel Dip*

This last experiment is one of the landmarks of quantum optics, and known as the Hong-Ou-Mandel "dip" [15]. It is simple in conception: the photons that come out of downconversion are steered onto a beam splitter. If the photons are indistinguishable as they arrive at the beam splitter, of the 4 outcomes, destructive interference selects the pairs to both go together to either output of the beam splitter. We can see this simply via the following argument. When the light goes through a beam splitter, energy conservation requires that the reflected and transmitted beams be 90° out of phase. Thus, for a symmetric beam splitter, the transmission amplitude is $t = 1/\sqrt{2}$ and the reflection amplitude is $r = i/\sqrt{2}$. Using Feynman's argument, the probability of the photons leaving different ports of the beam splitter is the square of the sum of the amplitude for both photons being reflected or both transmitted:

$$P_{\text{coinc}} = |r^2 + t^2|^2 = 0. \tag{14}$$

Thus, a measurement of the coincidences at the two outputs is zero. If the photons are distinguishable in any way, then the interference disappears. This distinction can be made by delaying one photon relative to the other by more than their coherence time/length. This can be achieved using a translation device. Thus as the path difference taken by the two photons reaches zero, a dip is seen in the coincident detection of the photons at the two beam splitter outputs. Alternatively we can manipulate the polarization of the input photons so that when they are parallel (indistinguishable) there is interference but when they are orthogonal (distinguishable) there is not.

Although this demonstration has already been made in a teaching environment [16], the experiment remains very challenging because the alignment of the photon beams incident on the beam splitter is very difficult to achieve. The arrival of technologies to provide factory aligned beam-splitting action, either with fiber-coupled beam splitters, in-fiber splitters or optical waveguide splitters, removes one significant difficulty. We are currently developing such an experiment with very positive results. These will be reported in the near future.

## 3. Discussion and Conclusions

As seen throughout this article, table-top experiments with photon pairs produced by parametric down-conversion offer experimental investigations of fundamental questions of quantum mechanics and also provide a basis for implementing quantum algebra in a physical system. The experiments revisit many quantum mechanical effects with no classical analog. The experiments are hands-on. The students can do the alignments, and so the experiments can be seen by the students as representing a real physical system that they put together, making a better connection between the theory and the implementation. Such a connection can be a powerful view given the number of applications that can be derived from quantum physics.

Another possibility that we have investigated recently is that these experiments can be automated and controlled remotely. We have done so during the university closure of in-person instruction due to the covid-19 pandemic [17]. The idea is that the apparatus is set up and aligned by the instructor/students, but the experiments are performed by students in a remote location. The moving parts are controlled via USB connections to an in-lab computer, which also has data acquisition programs. Students then access the lab computer via remote desktop. Webcams can provide a view of the laboratory setup for troubleshooting.

Such an approach has some benefits. One is that only one setup is needed, avoiding the cost of purchasing equipment for multiple setups. Because the moving parts are controlled by motor

actuators, their operation is repeatable and consistent. One of the perils of a setup with critical alignments is a clumsy bump of a component that requires a realignment. It is a new paradigm for lab instruction: the labs are offered in a serial rather than parallel fashion, and requires an instructor to be "on call" for unexpected troubles.

In this article we present 10 experiments. Are there others? The answer is yes. Advances in imaging technology will soon make it possible to purchase single-photon cameras at affordable prices, allowing correlated-photon experiments that involve imaging, such as the double-slit [18] or biprism [19] experiments. Single-photon cameras can also allow for very interesting experiments on "ghost" imaging [18], or spatial modes of single photons [20]. An interesting prospect could be the development of a CNOT gate that could enable 2-qubit quantum operations to be investigated in the educational setting. Looking into the future, the advent of shorter wavelength lasers in the mid 200-nm range could then provide down-converted photons in the middle of the visible, where low-cost photomultipliers can be used for detection.

## 4. Acknowledgements

This work was supported by NSF grant PHY-2011937. The students whose lab data are used are: L. Bu, D. Dougherty, C. Kneafsey, R. Lohar, E. Matt, T. Nguyen, and J. Tregidga.

## References

[1] Galvez E J, 2014 Resource Letter SPE-1: Single-Photon Experiments in the Undergraduate Laboratory *Am. J. Phys.* **82**, 1018.

[2] Galvez E J, Photon quantum mechanics, URL:https://egalvez.colgate.domains/pql/.

[3] Beck M, 2012 *Quantum Mechanics: Theory and Experiment* (Oxford: Oxford University Press).

[4] Galvez EJ, 2010 Qubit quantum mechanics with correlated-photon experiments," *Am. J. Phys.* **78**, 510.

[5] Gadway B, Galvez E J, De Zela F 2009 Bell-inequality violations with single photons entangled in momentum and polarization *J. Phys. B*, **42**, 015503.

[6] Greenstein G and Zajonc A G, 2006 *The Quantum Challenge* (Jones and Bartlett: Sudbiry).

[7] Grangier P, Roger G and Aspect A 1986 Experimental evidence for a photon anticorrelation effect on a beam splitter: A new light on single-photon interferences *Europhys. Lett.* **1** 173.

[8] Thorn J J, Neel M S, Donato V W, Bergreen G S, Davies R E and Beck M 2004 Observing the quantum behavior of light in an undergraduate laboratory *Am. J. Phys.* **72**, 1210.

[9] Feynman R P, Leighton R B and Sands M, *The Feynman Lectures on Physics* (Addison-Wesley, Reading, 1965) V. 3.

[10] Galvez E J, Holbrow C H, Pysher M J, Martin J W, Courtemanche N, Heilig L and Spencer J 2005 Interference with correlated photons: Five quantum mechanics experiments for undergraduates *Am. J. Phys.* **73**, 127.

[11] Wheeler J A 1983 Law without law in *Quantum Theory and Measurement* ed J A Wheeler and W H Zurek (Princeton NJ: Princeton University Press) p 182.

[12] Castrillon J, Galvez E J, Rodriguez B and Calderon-Losada O, 2019 A time-energy delayed-choice interference experiment for the undergraduate laboratory *Eur. J. Phys.* **40**, 055401.

[13] Dehlinger D and Mitchell M, 2002 Entangled photons, nonlocality, and Bell inequalities in the undergraduate laboratory *Am. J. Phys.* **70**, 903.

[14] Bista A, Sharma B and Galvez E , J (2021) A demonstration of quantum key distribution with entangled photons for the undergraduate laboratory," *Am. J. Phys.* **89**, 111.

[15] Hong C K, Ou Z Y and Mandel L 1987 Measurement of subpicosecond time intervals between two photons by interference *Phys. Rev. Lett.* **59**, 2044.

[16] Carivoto-Lagos J, Armendariz-P G, Velazquez V, Lopez-Moreno E, Grether M and Galvez E J 2012 The Hong-Ou-Mandel Interferometer in the undergraduate laboratory *Eur. J. Phys.* **33** 1843.

[17] Galvez E J 2021 Remote quantum optics labs *Proc. SPIE* **11701** 1170106.

[18] Aspden RS, and Padgett M J and Spalding G C 2016 Video recording of true single-photon double-slit interference *Am. J. Phys.* **84** 671.

[19] Jacques V, Toury T, Treussart F, Aspect A, Grangier P and Roch J-F 2005 Single-photon wavefront-splitting interference *Eur. Phys. J. D* **35** 561.

[20] Galvez E J, Coyle L E, Johnson E and Reschovsky B J 2011 Interferometric measurement of the helical mode of a single photon *New J. Phys* **13** 053017.